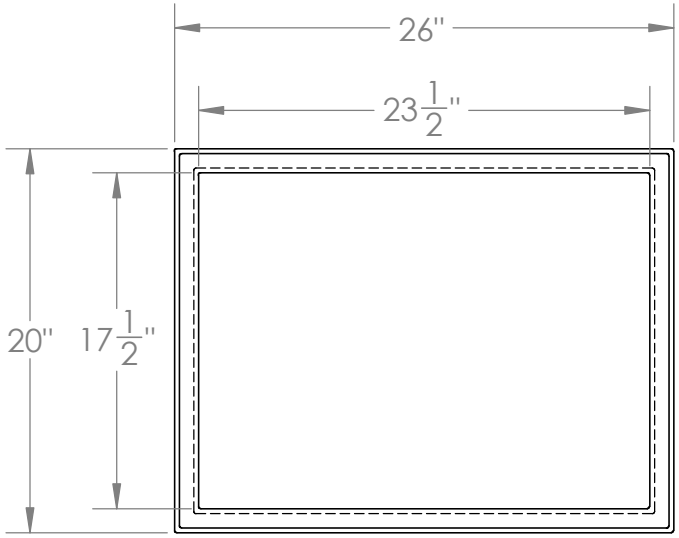

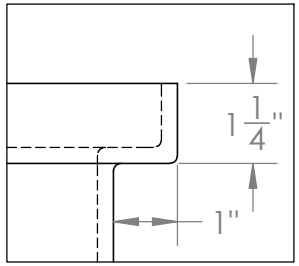

DETAIL A

Catalog options:
Cover #6367

ALL FILLETS AND ROUNDS R 1/8"

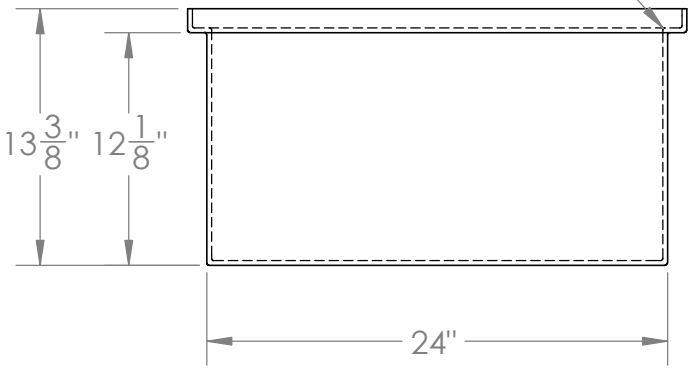

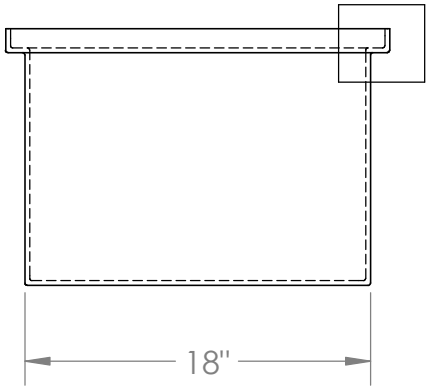

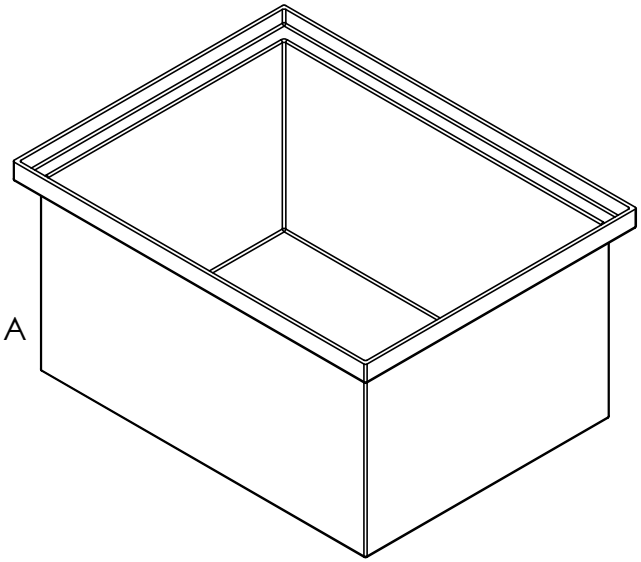

Heavy Duty Polyethylene
Tank w/ Internal Flange #6317

TAMCO® INDUSTRIES
1390 Neubrecht Road
Lima, Ohio 45801

DIMENSIONS ARE IN INCHES TOLERANCE: ± 1/4"		
MATERIAL LLDPE - FDA resin		
CAPACITY 22 US gal.		
GRADUATIONS NO		
NOMINAL WALL THICKNESS 1/4"		

	NAME	DATE
DRAWN	CDH	06/13/16
APPROVED	BAT	07/14/16

COMMENTS:
Translucent
UV Stabilized

MAX. OPERATING TEMP. 140°F
INTERMITTENT SERVICE TO 160°F
SEE CHEMICAL RESISTANCE
CHART FOR COMPATABILITY

PROPRIETARY AND CONFIDENTIAL

THE INFORMATION CONTAINED IN THIS DRAWING IS THE SOLE PROPERTY OF TAMCO. ANY REPRODUCTION IN PART OR AS A WHOLE WITHOUT THE WRITTEN PERMISSION OF TAMCO IS PROHIBITED.

STOCK NO. 6317

REV A

DO NOT SCALE DRAWING

WEIGHT: 12 lbs.