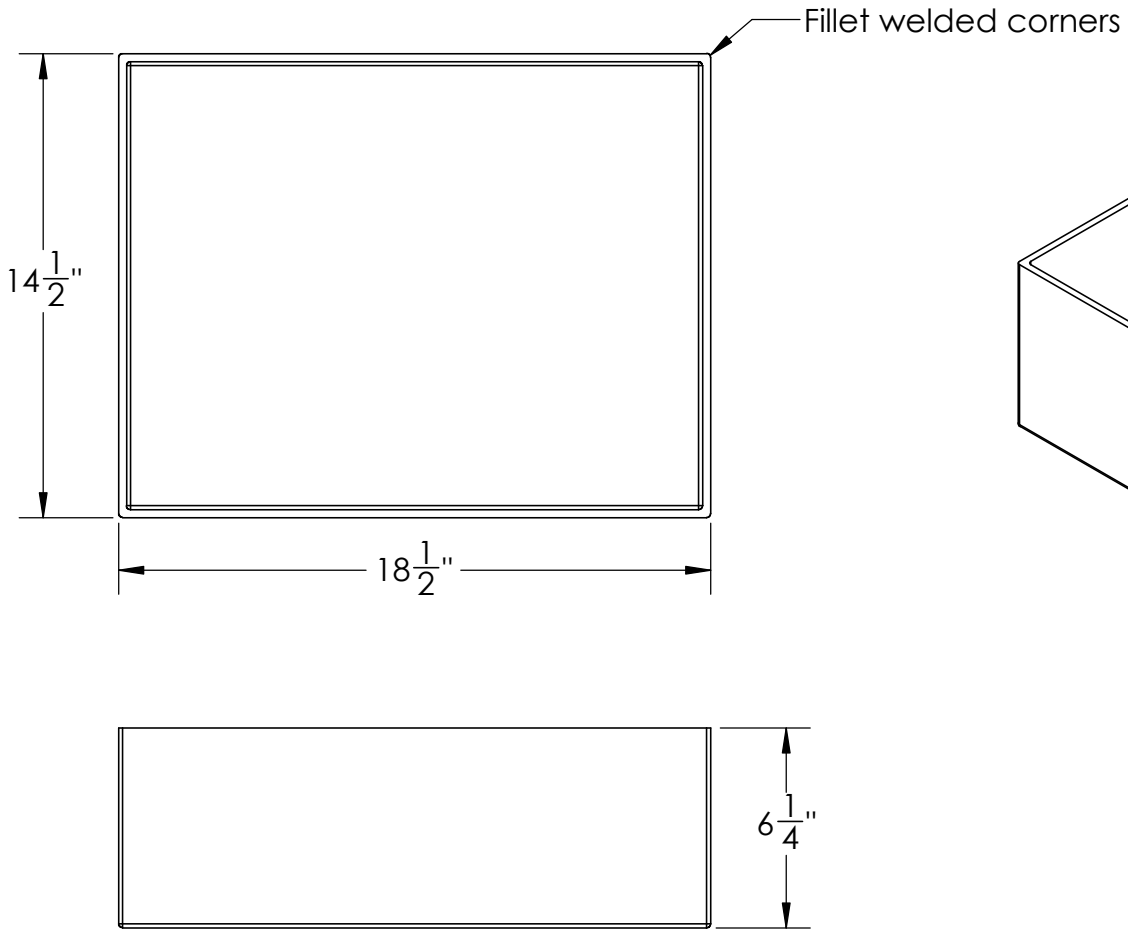

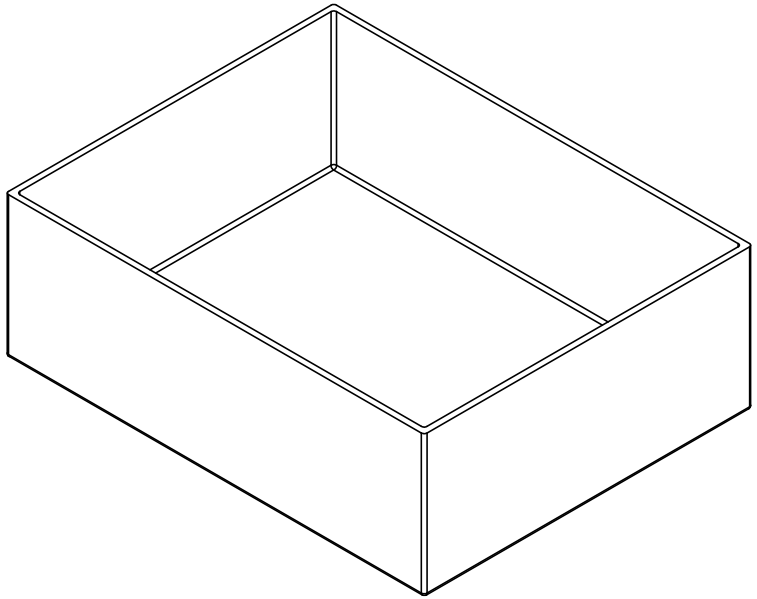

Polypropylene Tray/Tip
Plating Tank #14673

TAMCO® INDUSTRIES
1390 Neubrecht Road
Lima, Ohio 45801

DIMENSIONS ARE IN INCHES TOLERANCE: ± 1/4"		NAME	DATE
MATERIAL WELDED PP	DRAWN	JMP	10/11/18
	APPROVED		
CAPACITY N/A	COMMENTS: Other tray sizes, special partitions, flanges, outlets, etc. are available		
GRADUATIONS N/A			
NOMINAL WALL THICKNESS 1/4"			

PROPRIETARY AND CONFIDENTIAL

THE INFORMATION CONTAINED IN THIS DRAWING IS THE SOLE PROPERTY OF TAMCO. ANY REPRODUCTION IN PART OR AS A WHOLE WITHOUT THE WRITTEN PERMISSION OF TAMCO IS PROHIBITED.

MAX. OPERATING TEMP. 140°F
INTERMITTENT SERVICE TO 160°F
SEE CHEMICAL RESISTANCE CHART FOR COMPATABILITY

STOCK NO. 14673

REV A

DO NOT SCALE DRAWING

WEIGHT: 6 lbs.