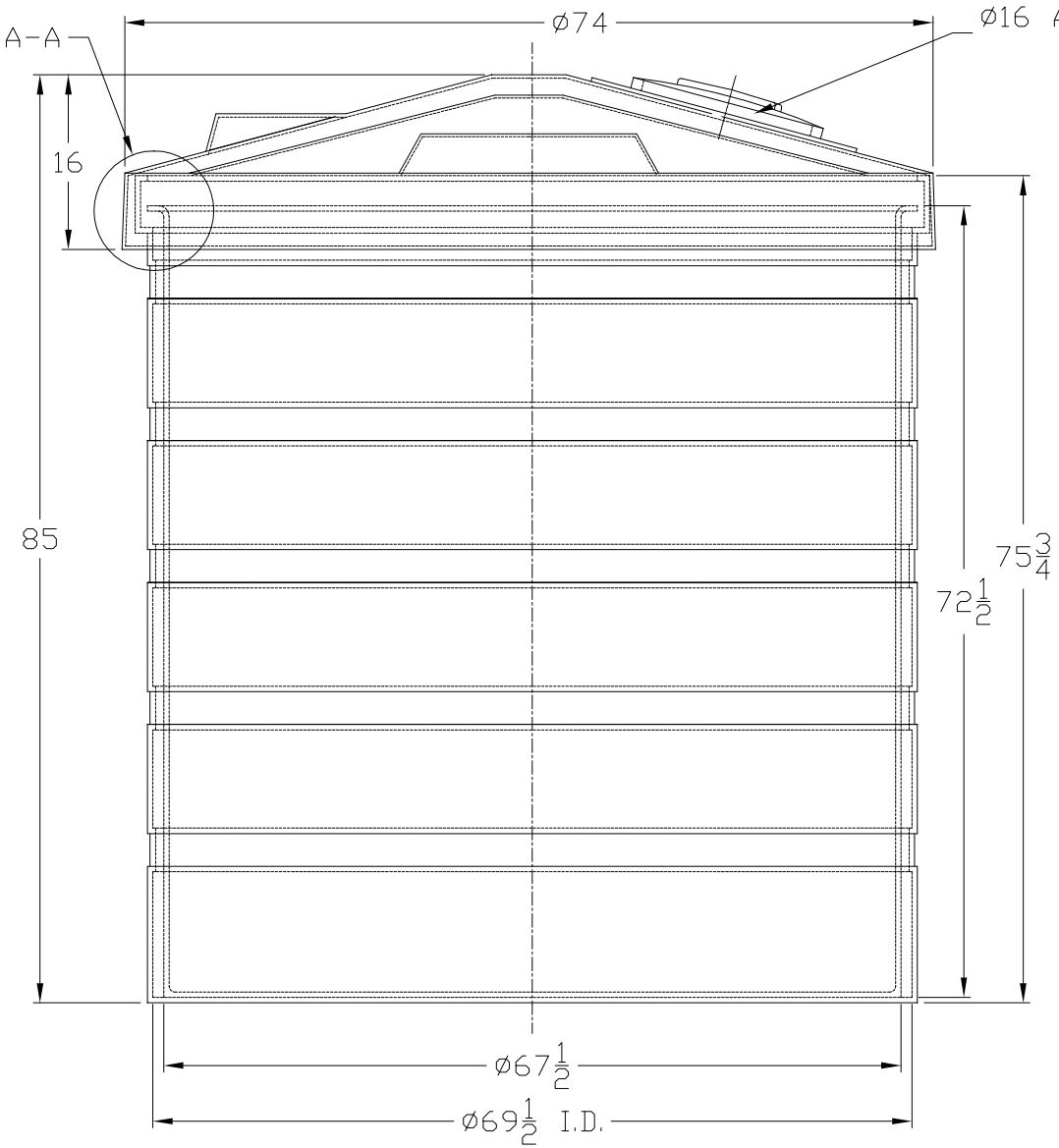

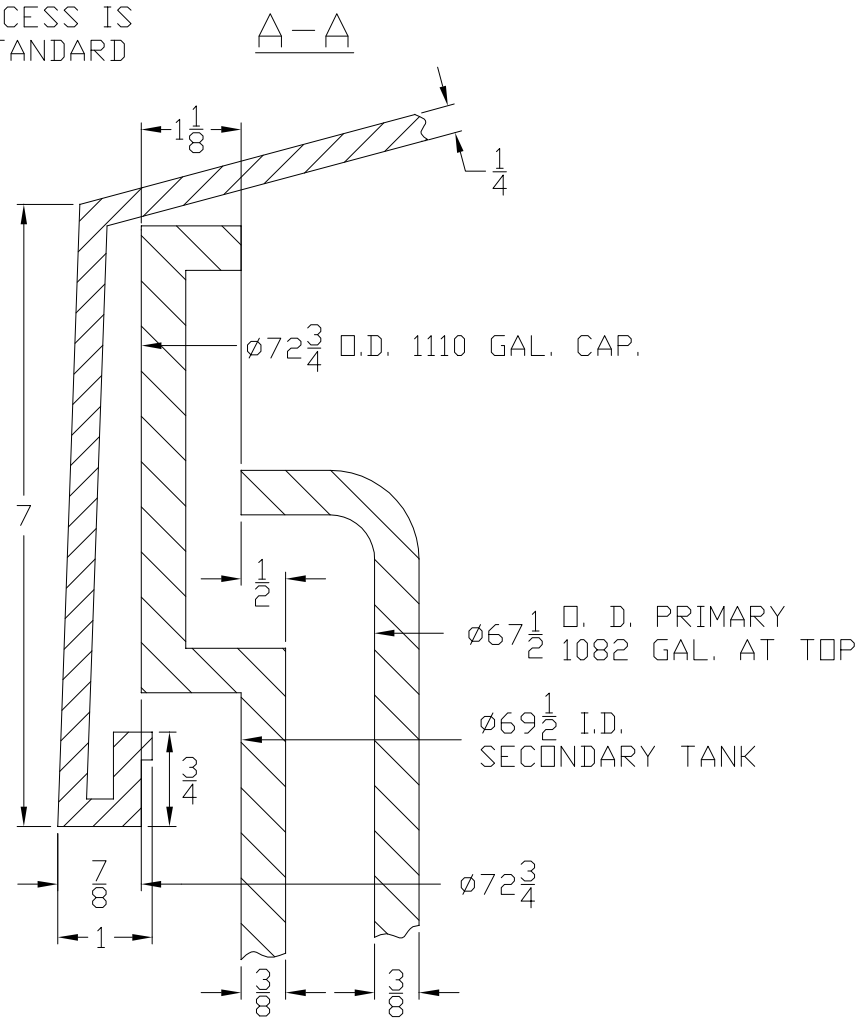

NOTE: PRIMARY TANK - TC6672AA
SECONDARY TANK - TC6972DC
COVER FOR TANK - TC69CVDC

ALL DIMENSIONS SHOWN ARE OUTSIDE PART DIMENSIONS IN INCHES, AND VARY BY THE STANDARD ROTATIONAL MOLDING TOLERANCE OF ±2%.

THIS DRAWING & DESIGN IS THE PROPERTY OF CHEM-TAINER INDUSTRIES INC. IT MAY NOT BE USED FOR ANY PURPOSE OTHER THAN BY THE OWNER. CHEM-TAINER DOES NOT AUTHORIZE THE REPRODUCTION OR CONVEYANCE OF ANY INFORMATION CONTAINED HEREIN.

Rev. 0	Date 02/11/00	File Name DC7485-3	
CHEM-TAINER Industries Inc. 361 Neptune Ave. N. Babylon, NY 11704 (516) 661-8300 Fax: (516) 661-8209		Date 02/11/00	Mold Location CA
		Drawn By: IIA	Cust. Rep.
TITLE 1000 GAL. DOUBLE WALL CONTAINMENT TANK ASSEMBLY			
Part # TC7485DC		Dwg. # C-7485-15	