PLA-03325

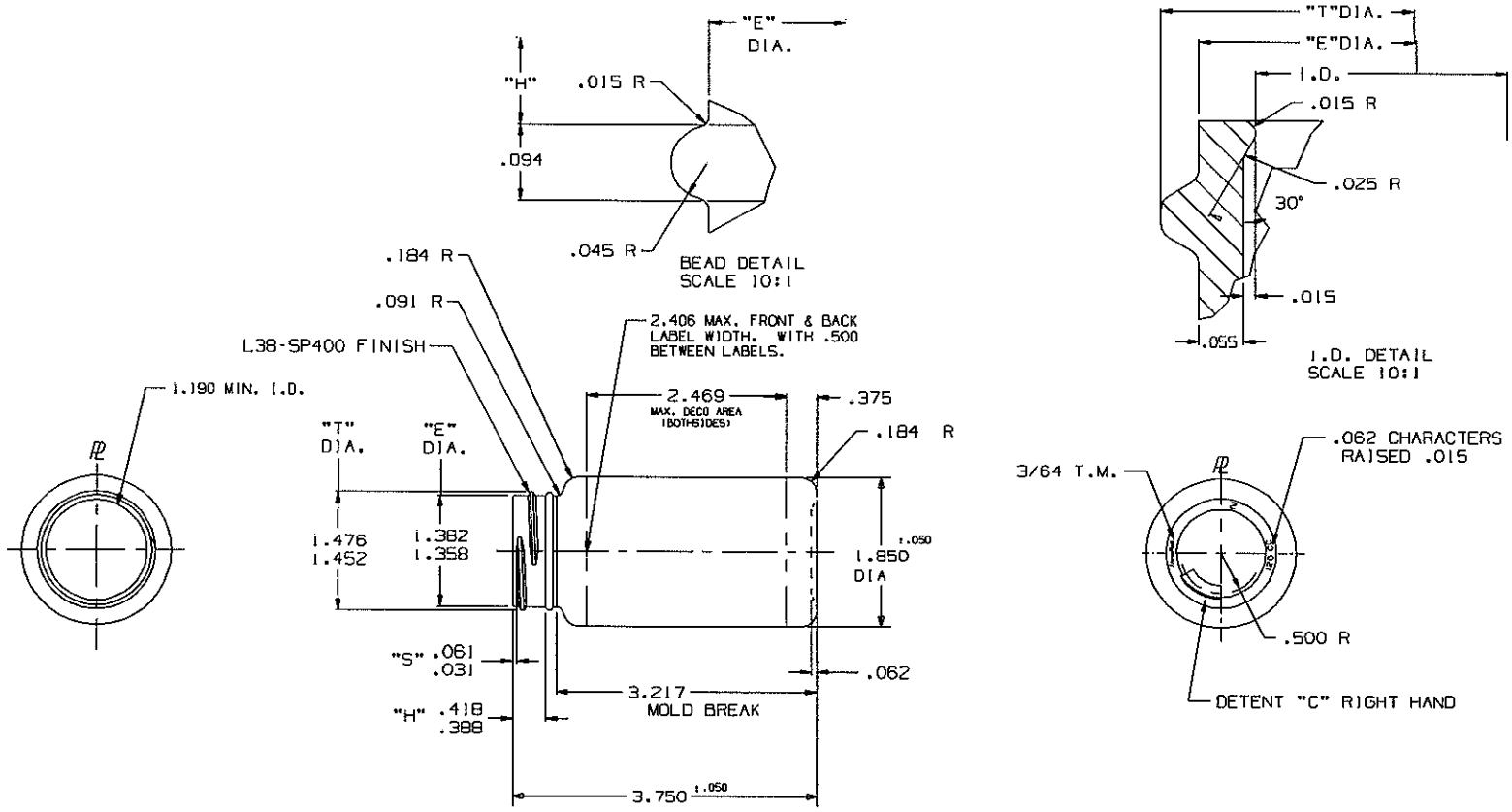

NOTES :

1) OVERFLOW CAPACITY : 4.58 : .17 FL.OZ. (135.5 + 5.0 CC'S.)

2) WEIGHT : 14.1 : 1.0 GRAMS

LTR	DESCRIPTION	DATE	APPROVED
K	ADDED LABEL DWG #/UPDATED TO STDS	17JUN85	KENT

REVISIONS

B-TD26-1657
P-TD26-1652
TOOL CHART

2	HIM65-479
1	HIM64-918

CODE CHART

DIMENSIONS SHOWN ARE:
☐ AS MOLDED ☒ AFTER TREAT
☐ AFTER TREAT & DECO

THIS DRAWING HAS BEEN PREPARED BY SILGAN PLASTICS FOR OUR OWN PRODUCTION OF THE ARTICLE SHOWN AND MAY NOT BE COPIED OR UTILIZED BY OTHERS WITHOUT OUR PRIOR WRITTEN CONSENT.

DRAWN BY	LMT
DATE	4/20/79
DWG. SIZE	C
INFO.	
CAD	UG
SCALE	FULL
MATERIAL	HDPE
QUOTE NO.	
LABEL DWG. NO.	P-02511-01
REF. DWG. NO.	MC-9-3971-K
TOOLING NO.	SEE CHART
CODE NO.	SEE CHART
SURF. AREA	

CUSTOMER: SILGAN PLASTICS CORP.

DESCRIPTION: (K) 120 CC W/M ROUND

SILGAN PLASTICS CORPORATION
TECHNICAL CENTER
1958 MECA WAY
NORCROSS, GA 30093

DRAWING NO. MC-9-7203-K