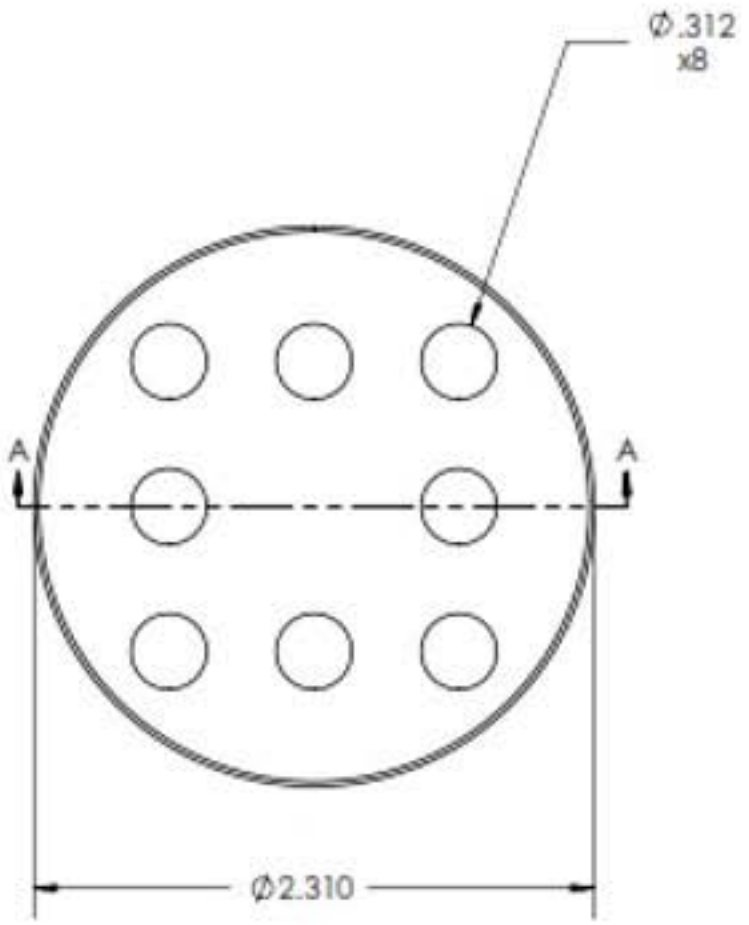

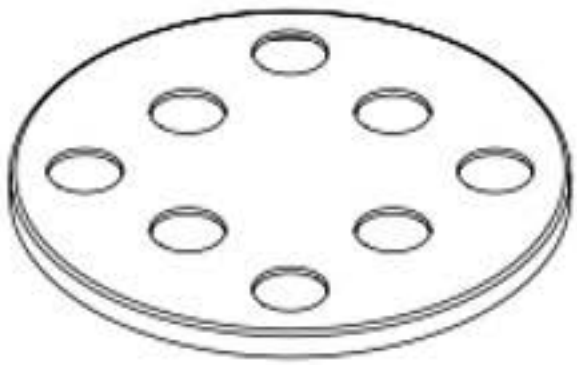

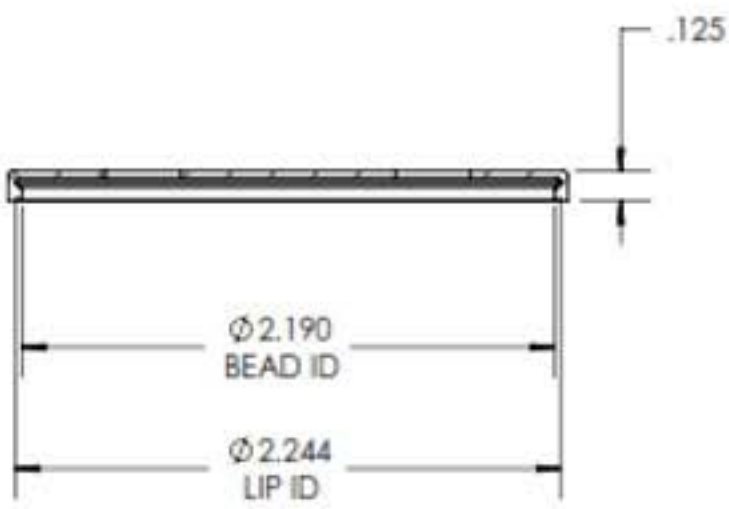

SECTION A-A

		DIMENSIONS ARE IN INCHES TOLERANCES: FRACTIONAL ± ANGULAR: MACH ± BEND ± TWO PLACE DECIMAL ±.015 THREE PLACE DECIMAL ±.008		NAME	DATE
			DRAWN	PRS	2/3/10
			CHECKED		
			ENG APPR.		
			MFG APPR.		
		MATERIAL polypropylene	Q.A.		
			COMMENTS:		
NEXT ASSY	USED ON	FINISH			
APPLICATION		DO NOT SCALE DRAWING			

PROPRIETARY AND CONFIDENTIAL

THE INFORMATION CONTAINED IN THIS DRAWING IS THE SOLE PROPERTY OF RELIABLE CAPS LLC. ANY REPRODUCTION IN PART OR AS A WHOLE WITHOUT THE WRITTEN PERMISSION OF RELIABLE CAPS LLC IS PROHIBITED.

Reliable Caps LLC

Fitment 63mm 8 Hole

SIZE	DWG. NO.	REV.
A	Fitment 43,48,63 L	
SCALE: 1:1	WEIGHT:	SHEET 10 OF 12