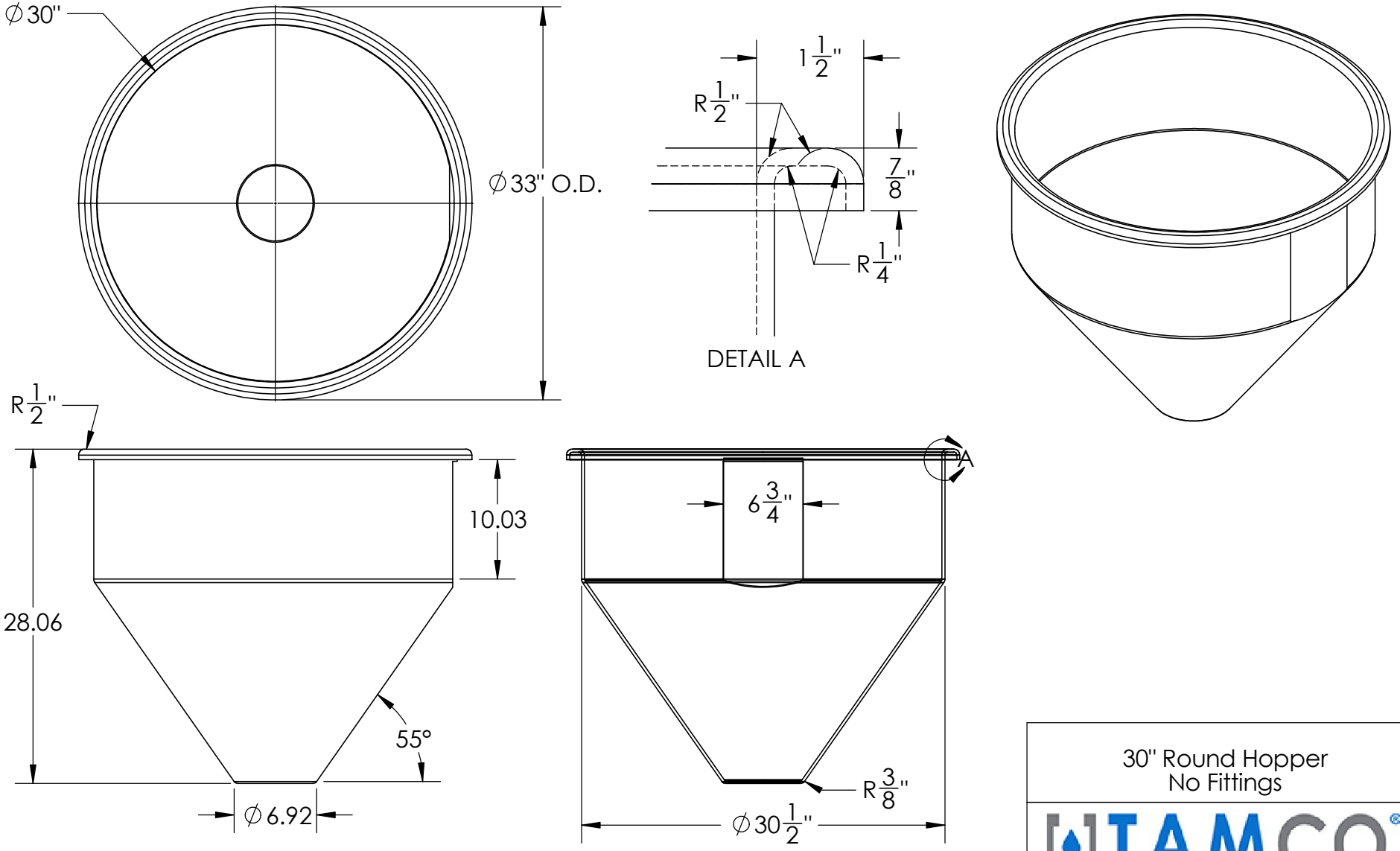

DIMENSIONS ARE IN INCHES TOLERANCE: ± 1/4"		NAME	DATE
MATERIAL LLDPE - FDA resin	DRAWN	NJV	5/8/24
	APPROVED		
CAPACITY 55 Gal	REVISIONS	NJV	2/20/26
GRADUATIONS N/A	COMMENTS: Natural, Black, White, Red, Blue, Green, Yellow UV Stabilized		
NOMINAL WALL THICKNESS 1/4"			

PROPRIETARY AND CONFIDENTIAL

THE INFORMATION CONTAINED IN THIS DRAWING IS THE SOLE PROPERTY OF TAMCO. ANY REPRODUCTION IN PART OR AS A WHOLE WITHOUT THE WRITTEN PERMISSION OF TAMCO IS PROHIBITED.

MAX. OPERATING TEMP. 140°F
INTERMITTENT SERVICE TO 160°F
SEE CHEMICAL RESISTANCE CHART FOR COMPATABILITY

30" Round Hopper
No Fittings

TAMCO® INDUSTRIES
1390 Neubrecht Road
Lima, Ohio 45801

STOCK NO.
89648, 89649, 89650, 89651, 89652, 89653, 89654

REV
A

DO NOT SCALE DRAWING

WEIGHT: 21 lbs.