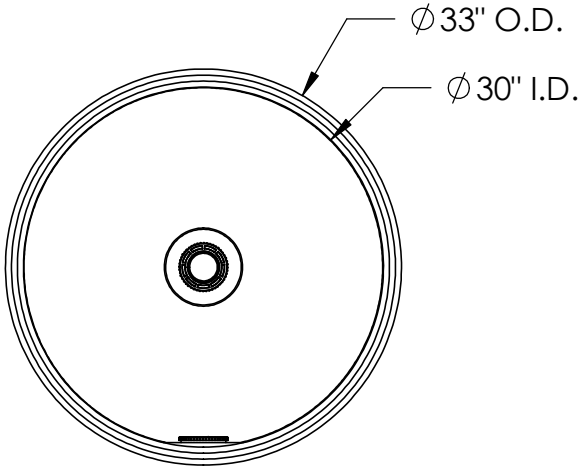

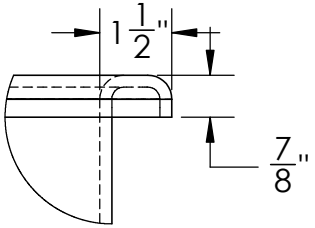

DETAIL A

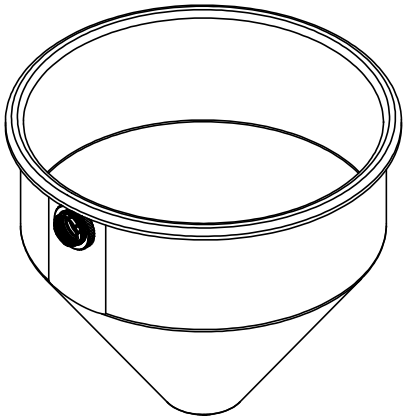

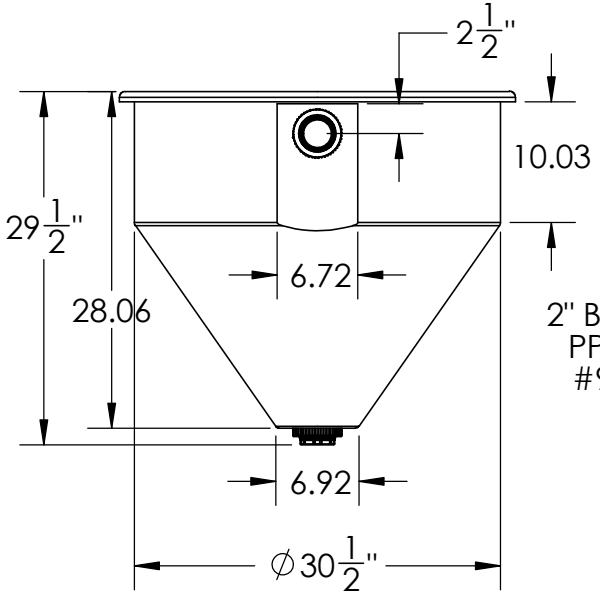

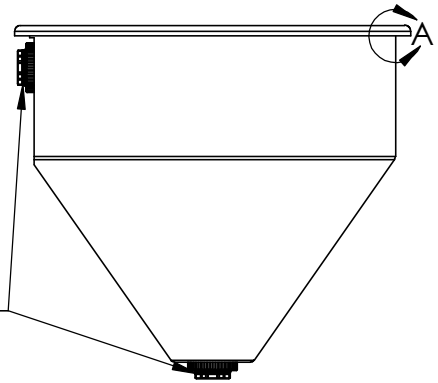

DIMENSIONS ARE IN INCHES TOLERANCE: ± 1/4"		NAME / DATE
MATERIAL: LLDPE - FDA resin	DRAWN	NJV 11/7/24
	APPROVED	
CAPACITY: 55 Gal	REVISIONS	NJV 2/20/26
GRADUATIONS: N/A	COMMENTS: Natural, Black, White, Red, Blue, Green, Yellow UV Stabilized	
NOMINAL WALL THICKNESS: 1/4"		

PROPRIETARY AND CONFIDENTIAL

THE INFORMATION CONTAINED IN THIS DRAWING IS THE SOLE PROPERTY OF TAMCO. ANY REPRODUCTION IN PART OR AS A WHOLE WITHOUT THE WRITTEN PERMISSION OF TAMCO IS PROHIBITED.

MAX. OPERATING TEMP. 140°F
INTERMITTENT SERVICE TO 160°F
SEE CHEMICAL RESISTANCE CHART FOR COMPATABILITY

30" Round Hopper
In & Out 2" FNPT

TAMCO® INDUSTRIES
1390 Neubrecht Road
Lima, Ohio 45801

STOCK NO.
89655, 89656, 89657, 89658, 89659, 89660, 89661

REV A

DO NOT SCALE DRAWING

WEIGHT: 22 lbs.