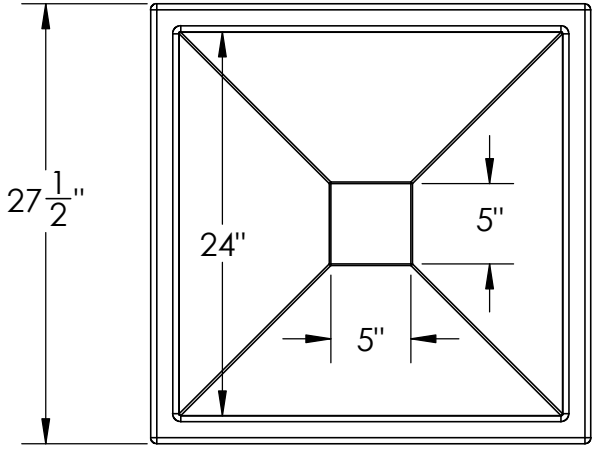

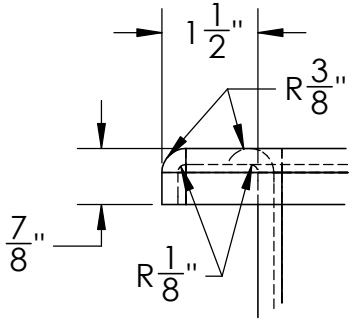

DETAIL A

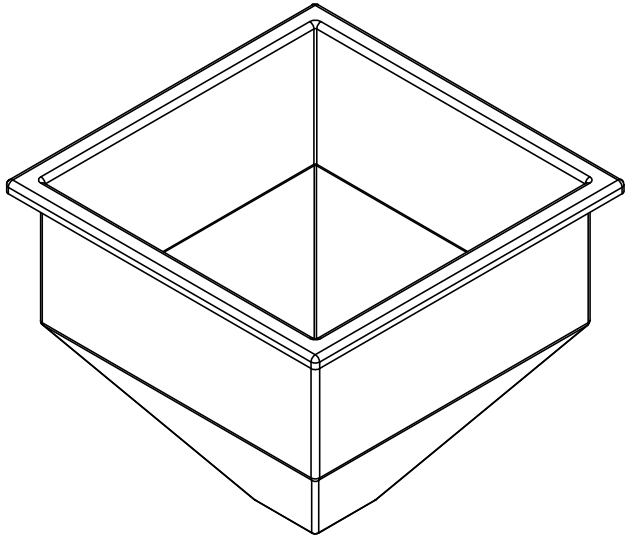

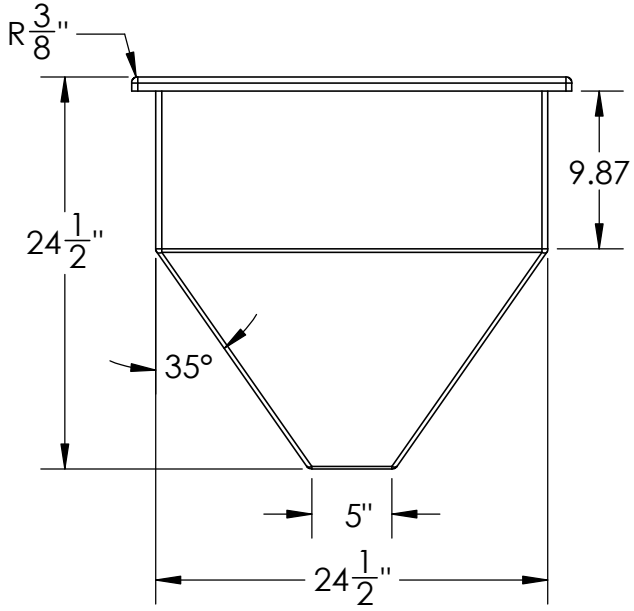

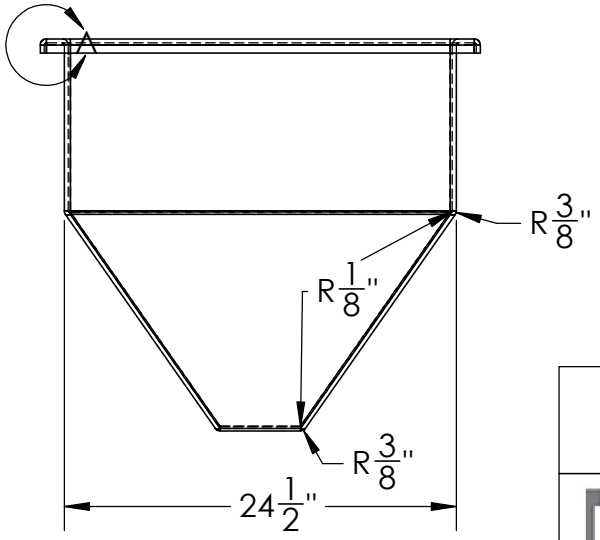

DIMENSIONS ARE IN INCHES TOLERANCE: ± 1/4"		NAME	DATE
MATERIAL LLDPE - FDA resin	DRAWN	NJV	5/8/24
	APPROVED		
CAPACITY -	REVISIONS		
GRADUATIONS N/A	COMMENTS: Natural, Black, White Red, Blue, Green, Yellow UV Stabilized		
NOMINAL WALL THICKNESS 1/4"			

PROPRIETARY AND CONFIDENTIAL

THE INFORMATION CONTAINED IN THIS DRAWING IS THE SOLE PROPERTY OF TAMCO. ANY REPRODUCTION IN PART OR AS A WHOLE WITHOUT THE WRITTEN PERMISSION OF TAMCO IS PROHIBITED.

MAX. OPERATING TEMP. 140°F
INTERMITTENT SERVICE TO 160°F
SEE CHEMICAL RESISTANCE CHART FOR COMPATABILITY

24" Square Hopper
No Fittings

TAMCO® INDUSTRIES
1390 Neubrecht Road
Lima, Ohio 45801

STOCK NO.
89711, 89712, 89713, 89714, 89715, 89716, 8917

REV
A

DO NOT SCALE DRAWING

WEIGHT: 24 lbs.