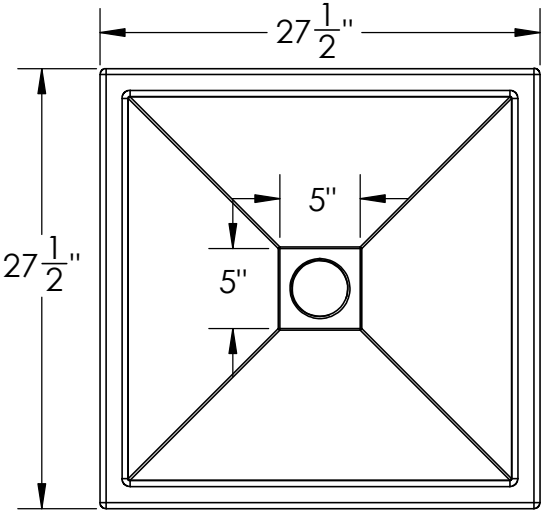

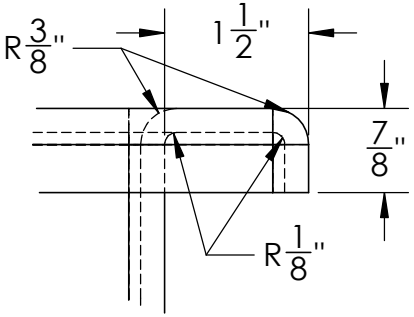

DETAIL A

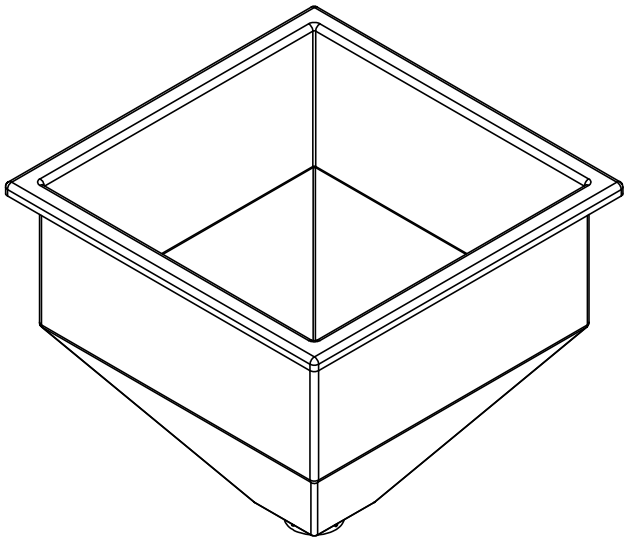

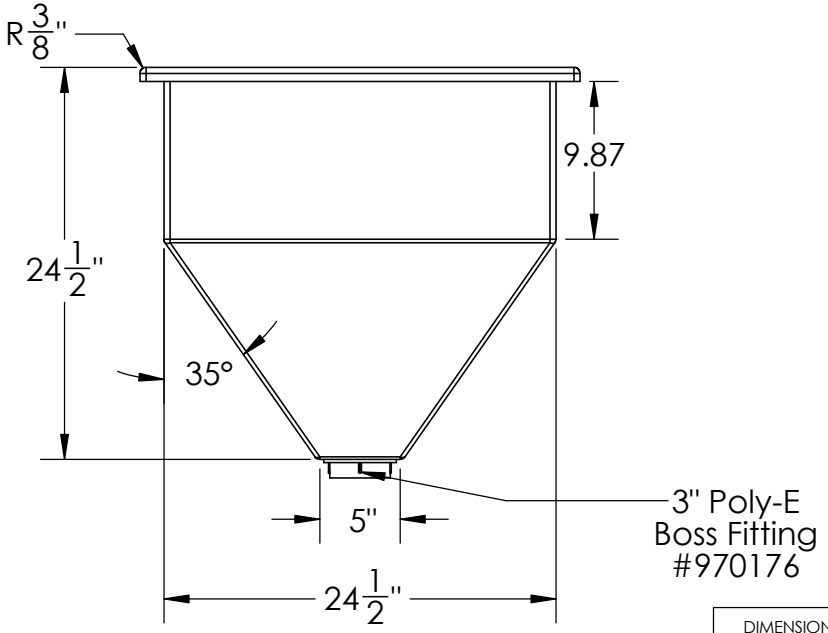

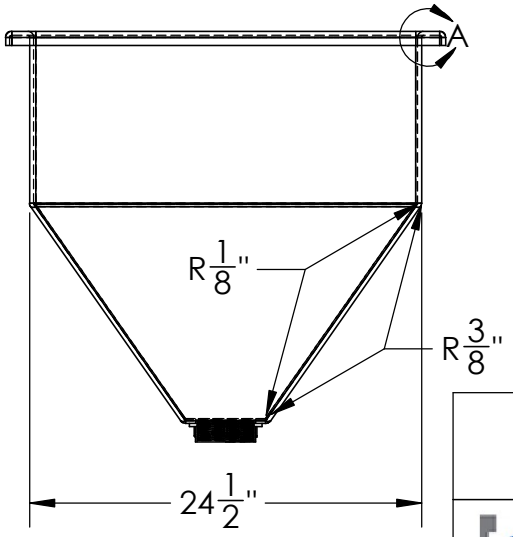

DIMENSIONS ARE IN INCHES TOLERANCE: ± 1/4"		NAME / DATE
MATERIAL LLDPE - FDA resin	DRAWN	NJV / 11/13/24
CAPACITY 41 Gal.	APPROVED	
GRADUATIONS N/A	REVISIONS	
NOMINAL WALL THICKNESS 1/4"	COMMENTS: Natural, Black, White Red, Blue, Green, Yellow UV Stabilized	

PROPRIETARY AND CONFIDENTIAL

THE INFORMATION CONTAINED IN THIS DRAWING IS THE SOLE PROPERTY OF TAMCO. ANY REPRODUCTION IN PART OR AS A WHOLE WITHOUT THE WRITTEN PERMISSION OF TAMCO IS PROHIBITED.

MAX. OPERATING TEMP. 140°F
INTERMITTENT SERVICE TO 160°F
SEE CHEMICAL RESISTANCE CHART FOR COMPATABILITY

24" Square Hopper with 3" Out Fitting

TAMCO® INDUSTRIES
1390 Neubrecht Road
Lima, Ohio 45801

STOCK NO.
89725, 89726, 89727, 89728, 89729, 89730, 89731

REV
A

DO NOT SCALE DRAWING

WEIGHT: 19 lbs.