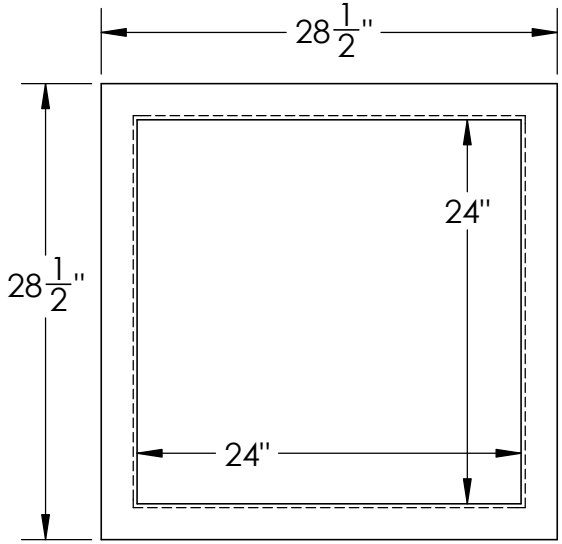

Catalog Options:
Cover #9130

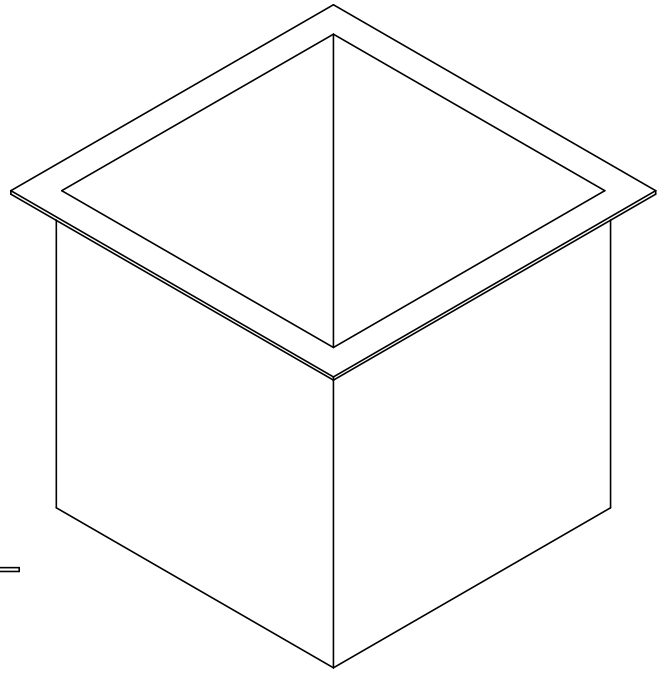

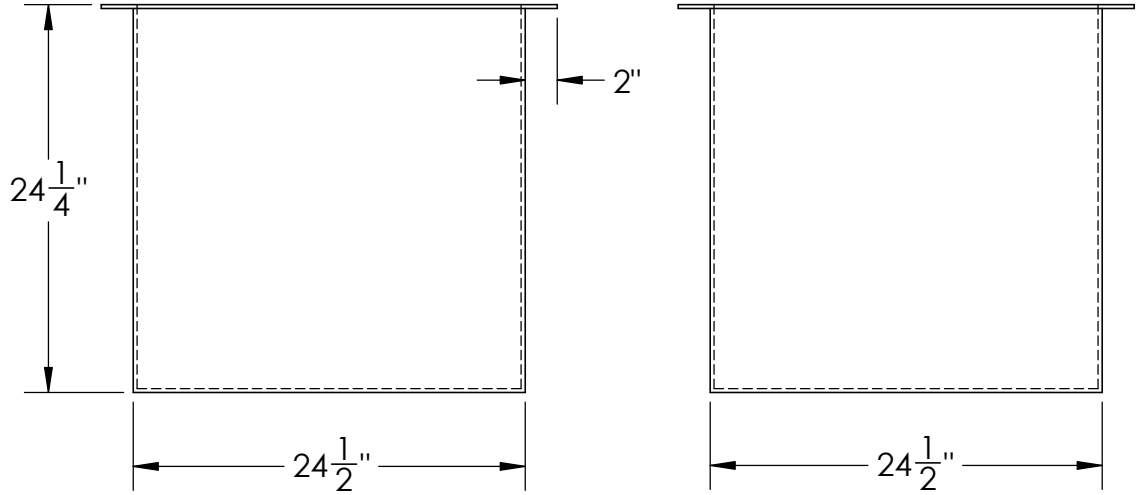

Polypropylene High Temperature Rectangular Tank #9022

TAMCO® INDUSTRIES
1390 Neubrecht Road
Lima, Ohio 45801

STOCK NO. 9022

REV A

DO NOT SCALE DRAWING

WEIGHT: 64 lbs.

	NAME	DATE
DRAWN	CDH	07/05/16
APPROVED	BAT	07/14/16

DIMENSIONS ARE IN INCHES
TOLERANCE: ± 1/4"

MATERIAL
POLYPROPYLENE

CAPACITY
59 US gal.

GRADUATIONS
N/A

NOMINAL WALL THICKNESS
1/4"

COMMENTS:
Welded Construction

MAX. OPERATING TEMP. 200°F
SEE CHEMICAL RESISTANCE CHART FOR COMPATABILITY

PROPRIETARY AND CONFIDENTIAL

THE INFORMATION CONTAINED IN THIS DRAWING IS THE SOLE PROPERTY OF TAMCO. ANY REPRODUCTION IN PART OR AS A WHOLE WITHOUT THE WRITTEN PERMISSION OF TAMCO IS PROHIBITED.