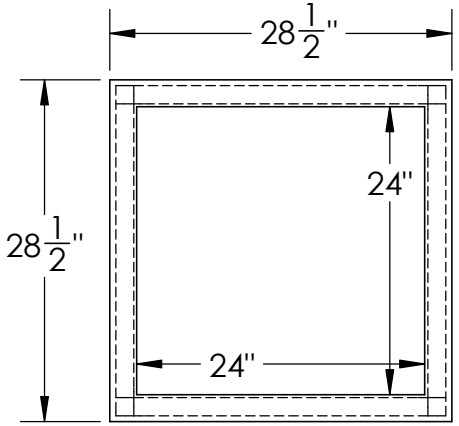

Catalog Options:
Cover #9130

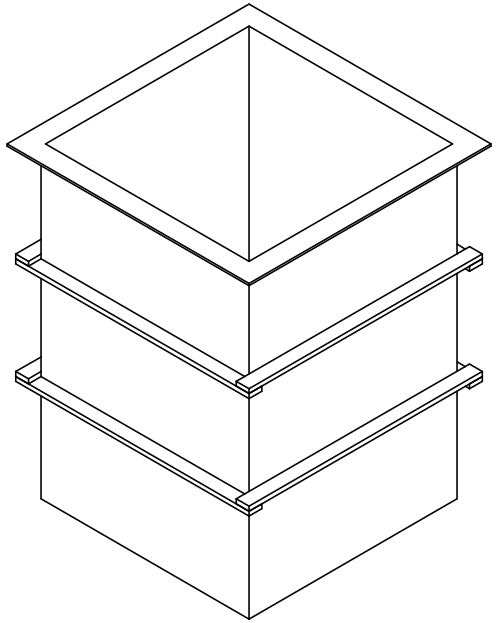

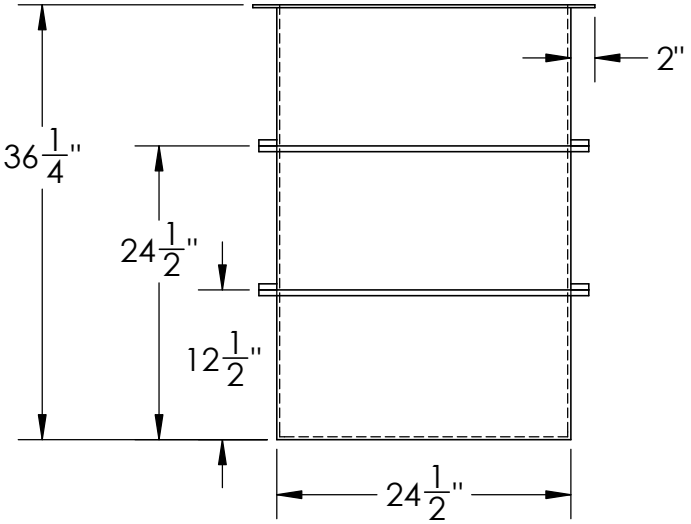

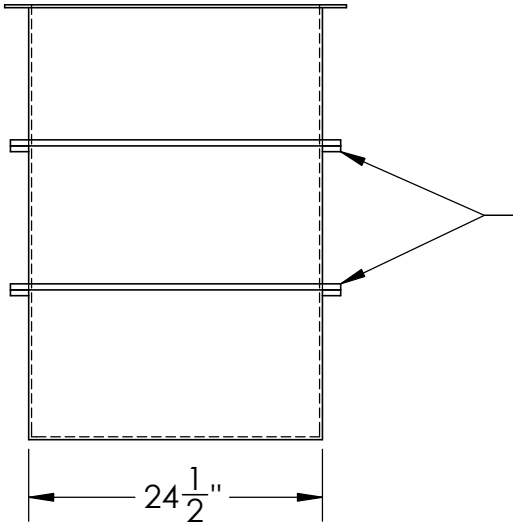

Polypropylene High Temperature Rectangular Tank #9089

TAMCO® INDUSTRIES
1390 Neubrecht Road
Lima, Ohio 45801

DIMENSIONS ARE IN INCHES TOLERANCE: ± 1/4"		NAME / DATE
MATERIAL: POLYPROPYLENE	DRAWN	CDH 07/05/16
	APPROVED	BAT 07/14/16
CAPACITY: 89 US gal.	COMMENTS: Welded Construction	
GRADUATIONS: N/A		
NOMINAL WALL THICKNESS: 1/4"		

STOCK NO. 9089 REV A

DO NOT SCALE DRAWING | WEIGHT: 74 lbs.

PROPRIETARY AND CONFIDENTIAL

THE INFORMATION CONTAINED IN THIS DRAWING IS THE SOLE PROPERTY OF TAMCO. ANY REPRODUCTION IN PART OR AS A WHOLE WITHOUT THE WRITTEN PERMISSION OF TAMCO IS PROHIBITED.

MAX. OPERATING TEMP. 200°F
SEE CHEMICAL RESISTANCE CHART FOR COMPATABILITY