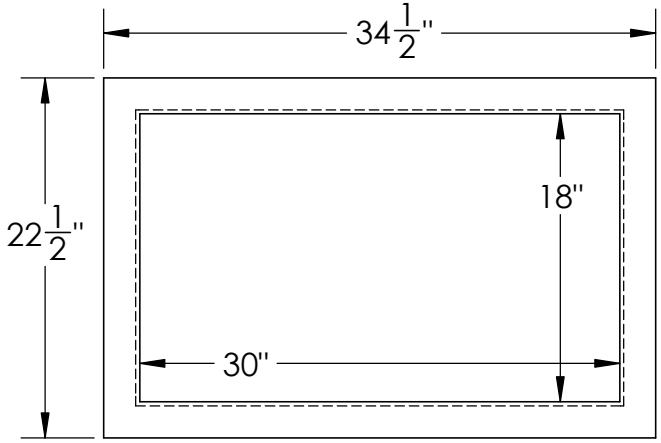

Catalog Options:
Cover #9132

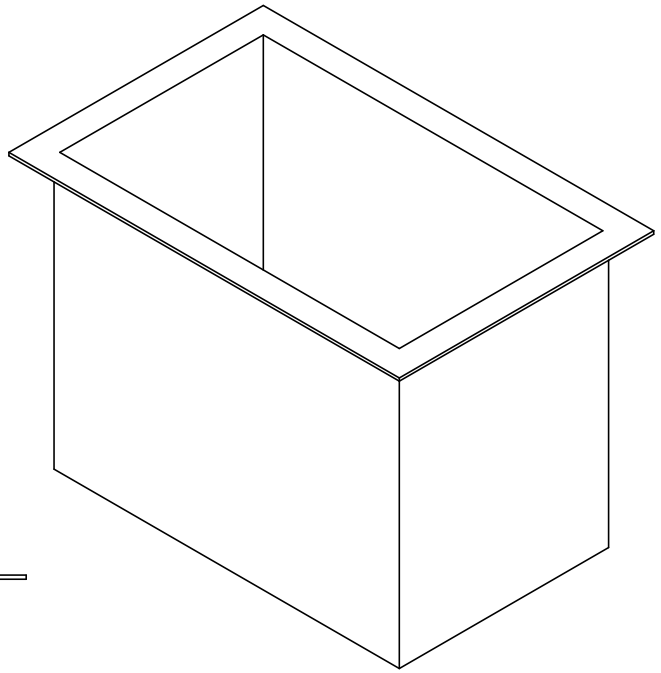

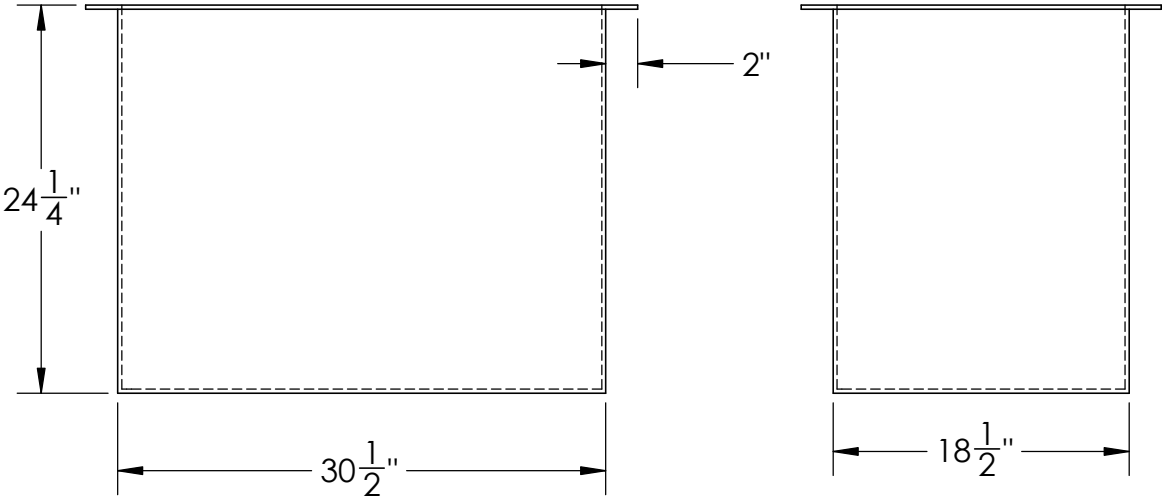

Polypropylene High Temperature Rectangular Tank #9171

TAMCO® INDUSTRIES
1390 Neubrecht Road
Lima, Ohio 45801

DIMENSIONS ARE IN INCHES TOLERANCE: ± 1/4"	NAME	DATE
DRAWN	CDH	07/05/16
APPROVED	BAT	07/14/16

MATERIAL: POLYPROPYLENE

CAPACITY: 56 US gal.

GRADUATIONS: N/A

NOMINAL WALL THICKNESS: 1/4"

COMMENTS:
Welded Construction

STOCK NO. 9171

REV A

DO NOT SCALE DRAWING

WEIGHT: 60 lbs.

MAX. OPERATING TEMP. 200°F
SEE CHEMICAL RESISTANCE CHART FOR COMPATABILITY

PROPRIETARY AND CONFIDENTIAL

THE INFORMATION CONTAINED IN THIS DRAWING IS THE SOLE PROPERTY OF TAMCO. ANY REPRODUCTION IN PART OR AS A WHOLE WITHOUT THE WRITTEN PERMISSION OF TAMCO IS PROHIBITED.