The Colonial Single Union Ball Valve (SUBV) is ideally suited for commercial, agricultural and irrigation environments. Four different body materials and two different o-ring materials are available.

This valve is cost effective in systems that require only one union for dismantling. Ideally suited where full port, full flow and reparability are required.

FEATURES AND BENEFITS

- Full port design (same I.D. as Sch 80 pipe) produces minimum turbulence at high flow rates.
- Smooth turning.
- Externally adjustable (no need to remove valve from line to adjust for seat wear).
- Socket dimensions meet all ASTM requirements. PVC: D-2467; D-2464; CPVC: F-439, F-437.
- O-rings made of EPDM or Viton®.
- 100% thermoplastic design eliminates process or atmospheric corrosion. (Polypropylene and PVDF valves utilize a small stainless steel screw to retain the handle to the stem.)
- Body materials: PVC, CPVC, PP and PVDF.
- Easily disassembled for service.

COLONIAL VALVE
A DIVISION OF COLONIAL ENGINEERING, INC.

Printed in USA 12/03

CUSTOMER SERVICE: 6400 Corporate Ave., Portage, MI 49002, Toll-free (800) 374 0234, Phone (269) 323 2495, Fax (269) 323 0630, www.colonialengineering.com

Colonial Single Union Ball Valves are tested under high pressure for structural integrity and low pressure for a bubble-tight seal.

SAMPLE ENGINEERING SPECIFICATIONS

All thermoplastic Single Union ball valves (1/2 through 2") shall be produced of PVC Type I, cell classification 12454 or CPVC Type IV, cell classification 23447 or PP or PVDF material. Valve seats shall be produced of Teflon® material. Valve o-rings shall be made of EPDM, Santoprene or Viton® material. Valve stem shall have two o-rings. Valves shall be full port (equal to or greater than the minimum inside diameter of Sch 80 pipe). End connectors shall be of socket, thread or flange type. Valves shall meet or exceed ASTM F-1970 standard for pressure rating. Valves shall be capable of being adjusted externally for seat wear.

Viton® is a registered trademark of Dupont Dow Elastomers. Teflon® is a registered trademark of DuPont. Only DuPont makes Teflon.

TEMPERATURE DE-RATING FOR VALVES & UNIONS (ABOVE 73°F)

Temp (°F)	PVC	CPVC	PP	PVDF
73	1.00	1.00	1.00	1.00
80	.88	.96	.93	.93
90	.75	.92	.83	.87
100	.62	.85	.74	.82
110	.50	.77	.66	.76
120	.40	.70	.58	.71
130	.30	.62	.51	.65
140	.22	.55	.40	.61
150	NR	.47	.38	.57
160	NR	.40	.35	.54
170	NR	.32	.29	.51
180	NR	.25	.23	.47
200	NR	.18	.14	.41
210	NR	.15	.10	.38
240	NR	NR	NR	.28
280	NR	NR	NR	.22

NR: Not Recommended

Caution: Colonial recommends a minimum installation distance of 10 X the pipe diameter from a pump or other sources of turbulence.

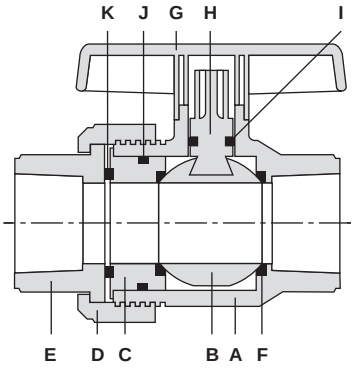

COMPONENTS AND MATERIALS

Part Letter	Component	Quantity	Material
A	Body	1	PVC, CPVC, PP, PVDF
B	Ball	1	PVC, CPVC, PP, PVDF
C	Carrier	1	PVC, CPVC, PP, PVDF
D	Union Nut	1	PVC, CPVC, PP, PVDF
E	Connector	1	PVC, CPVC, PP, PVDF
F	Ball Seat	2	Teflon®
G	Handle	1	ABS
H	Stem	1	PVC, CPVC, PP, PVDF
I	Stem O-Ring	1	EPDM, Viton®
J	Carrier O-Ring	1	EPDM, Viton®
K	Face O-Ring	1	EPDM, Viton®

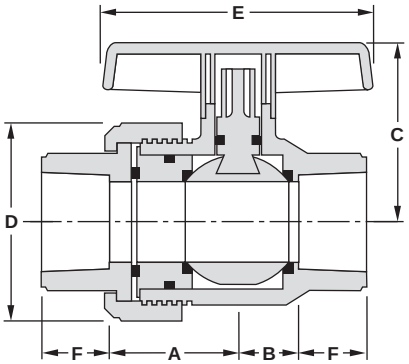

DIMENSIONS

Slip X Slip

Size	A	B	C	D	E	F
1/2"	1-9/32"	11/16"	1-7/8"	2"	3-1/4"	29/32"
3/4"	1-9/16"	27/32"	2-3/8"	2-7/16"	3-7/16"	1"
1"	1-13/16"	15/16"	2-11/16"	2-13/16"	4"	1-1/8"
1-1/4"	1-29/32"	1-1/8"	2-25/32"	3-11/32"	4-11/32"	1-1/4"
1-1/2"	2-1/4"	1-1/8"	3-11/32"	3-25/32"	5"	1-13/32"
2"	2-7/16"	1-13/32"	3-31/32"	4-5/32"	5-15/16"	1-17/32"

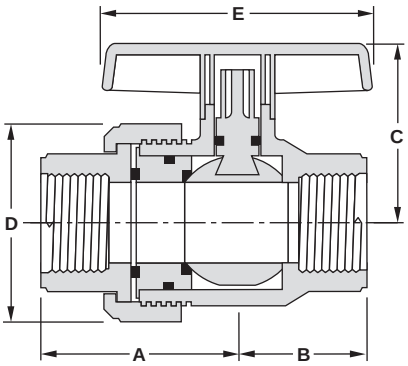

DIMENSIONS
FPT X FPT

Size	A	B	C	D	E
1/2"	2"	1-19/32"	1-7/8"	2"	3-1/4"
3/4"	2-1/16"	1-31/32"	2-3/8"	2-7/16"	3-7/16"
1"	2-21/32"	2-3/32"	2-11/16"	2-13/16"	4"
1-1/4"	3-5/32"	2-3/8"	2-25/32"	3-11/32"	4-11/32"
1-1/2"	3-1/4"	2-1/2"	3-11/32"	3-25/32"	5"
2"	3-1/2"	2-7/8"	3-31/32"	4-5/32"	5-15/16"

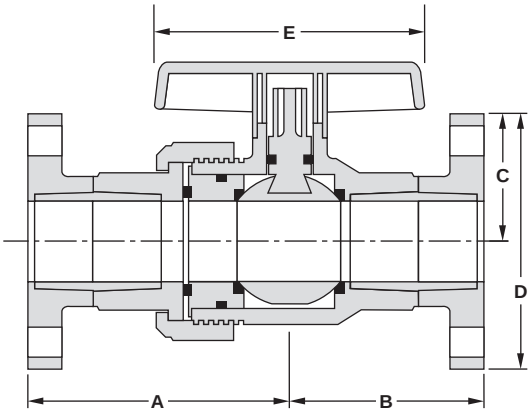

DIMENSIONS
Flanged

Size	A	B	C	D	E
1/2"	3-1/4"	2-21/32"	1-7/8"	3-15/32"	3-1/4"
3/4"	4"	3-9/32"	2-3/8"	3-7/8"	3-7/16"
1"	4-7/32"	3-11/32"	2-11/16"	4-1/4"	4"
1-1/4"	4-9/16"	3-25/32"	2-25/32"	4-19/32"	4-11/32"
1-1/2"	5-7/32"	4-3/32"	3-11/32"	5"	5"
2"	5-11/16"	4-11/16"	3-31/32"	6"	5-15/16"

FLUID FLOW COEFFICIENT
*Gallons per minute @ 1 psi pressure drop

Nominal Size	C_v*
1/2"	24
3/4"	61
1"	125
1-1/4"	194
1-1/2"	310
2"	577

TORQUE VALUES

Valve Size	Opening Torque (In-Lbs)
1/2"	60
3/4"	420
1"	720
1-1/4"	1,200
1-1/2"	1,320
2"	2,160

WORKING PRESSURE @ 73°F NON-SHOCK WATER

Valve Size	PVC/CPVC	PP/PVDF
1/2"	235	150
3/4"	235	150
1"	235	150
1-1/4"	200	150
1-1/2"	200	150
2"	200	150

METAL TO PLASTIC TRANSITION WARNING

Colonial does not recommend the joining of metal pipe threads with plastic female pipe threads. To join a metal system with a plastic system, we recommend the use of a transition union or flanged end connections (shown below).

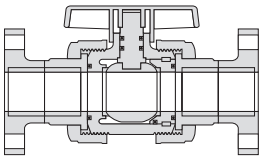

MATERIAL CHOICES		EPDM O-Rings	Viton® O-Rings	Viton® O-Rings	Viton® O-Rings	Viton® O-Rings
Size	Style	PVC		CPVC	PP	PVDF
1/2"	Socket	V07131B	V07132B	V07134B	V07136B	V07138B
1/2"	Thread	V07141B	V07142B	V07144B	V07146B	V07148B
1/2"	Flange	V07151B	V07152B	V07154B	—	—
3/4"	Socket	V08131B	V08132B	V08134B	V08136B	V08138B
3/4"	Thread	V08141B	V08142B	V08144B	V08146B	V08148B
3/4"	Flange	V08151B	V08152B	V08154B	—	—
1"	Socket	V10131B	V10132B	V10134B	V10136B	V10138B
1"	Thread	V10141B	V10142B	V10144B	V10146B	V10148B
1"	Flange	V10151B	V10152B	V10154B	—	—
1-1/4"	Socket	V14131B	V14132B	V14134B	V14136B	V14138B
1-1/4"	Thread	V14141B	V14142B	V14144B	V14146B	V14148B
1-1/4"	Flange	V14151B	V14152B	V14154B	—	—
1-1/2"	Socket	V17131B	V17132B	V17134B	V17136B	V17138B
1-1/2"	Thread	V17141B	V17142B	V17144B	V17146B	V17148B
1-1/2"	Flange	V17151B	V17152B	V17154B	—	—
2"	Socket	V20131B	V20132B	V20134B	V20136B	V20138B
2"	Thread	V20141B	V20142B	V20144B	V20146B	V20148B
2"	Flange	V20151B	V20152B	V20154B	—	—

COMPRESSED AIR WARNING

The products in this document are only intended for use in transferring or storing chemically compatible pressurized liquids. **Do not test or use products in this document with compressed air or other gases.** Doing so is dangerous and could cause injury or great bodily harm should a system fail under compressed air. Only use products that are specifically designed for compressed air/gas service. Call Colonial technical service for more information.