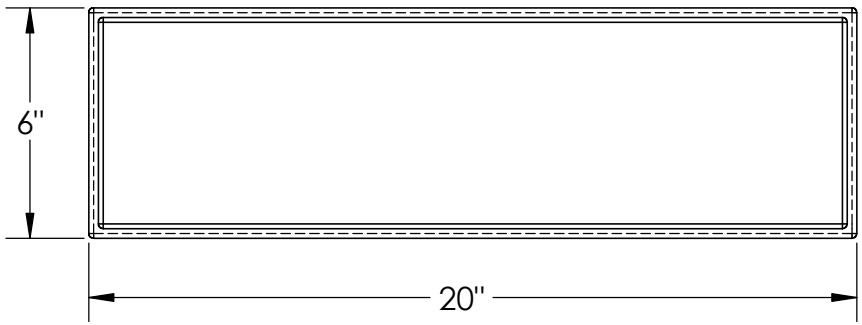

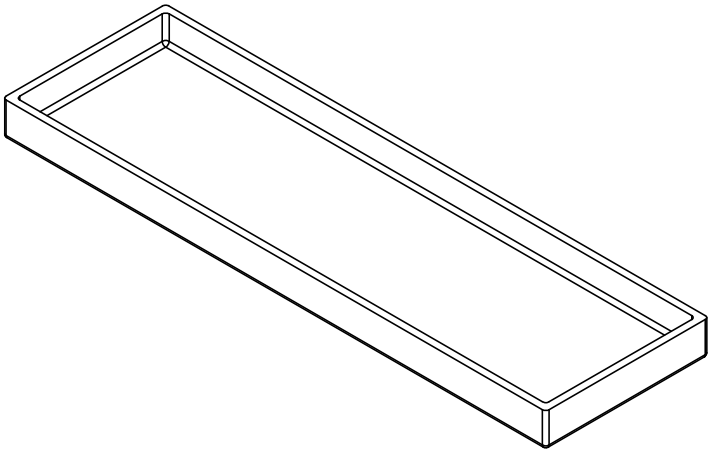

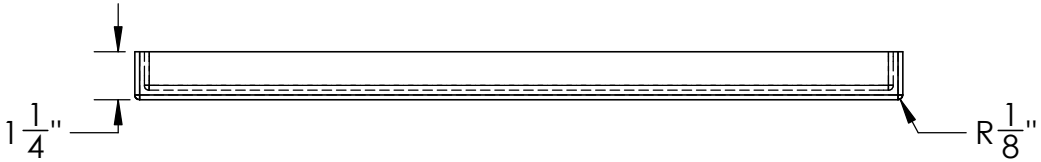

Black Polyethylene
Tray #14865

TAMCO® INDUSTRIES
1390 Neubrecht Road
Lima, Ohio 45801

DIMENSIONS ARE IN INCHES TOLERANCE: ± 1/4"		NAME	DATE
MATERIAL LLDPE - FDA resin	DRAWN	JMP	11/13/18
	APPROVED		
CAPACITY N/A	COMMENTS:		
GRADUATIONS N/A	Black UV Stabilized		
NOMINAL WALL THICKNESS 1/4"			

PROPRIETARY AND CONFIDENTIAL

THE INFORMATION CONTAINED IN THIS DRAWING IS THE SOLE PROPERTY OF TAMCO. ANY REPRODUCTION IN PART OR AS A WHOLE WITHOUT THE WRITTEN PERMISSION OF TAMCO IS PROHIBITED.

MAX. OPERATING TEMP. 140°F
INTERMITTENT SERVICE TO 160°F
SEE CHEMICAL RESISTANCE
CHART FOR COMPATABILITY

STOCK NO. 14865

REV A

DO NOT SCALE DRAWING

WEIGHT: 2 lbs.