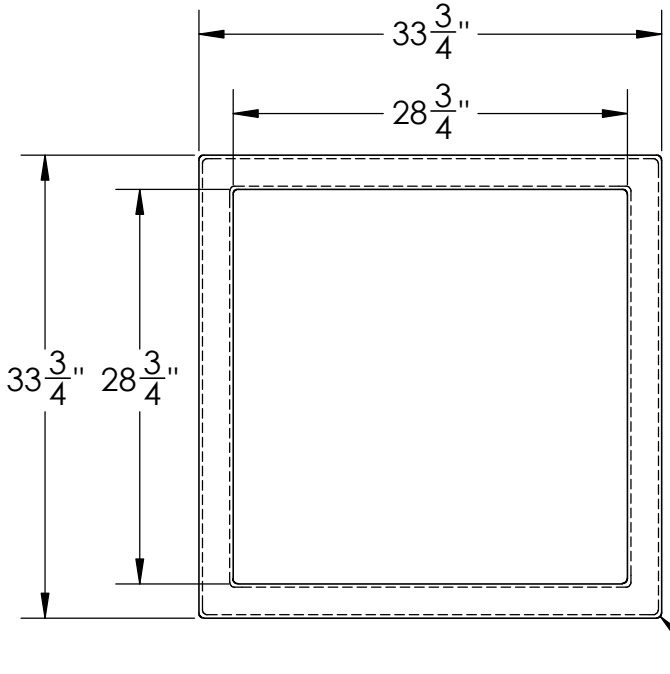

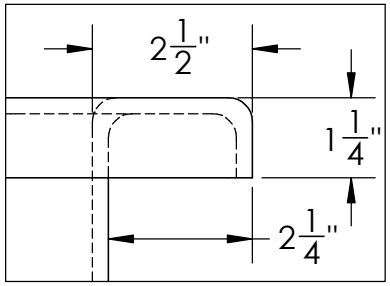

DETAIL A

Catalog options:
Cover #6206

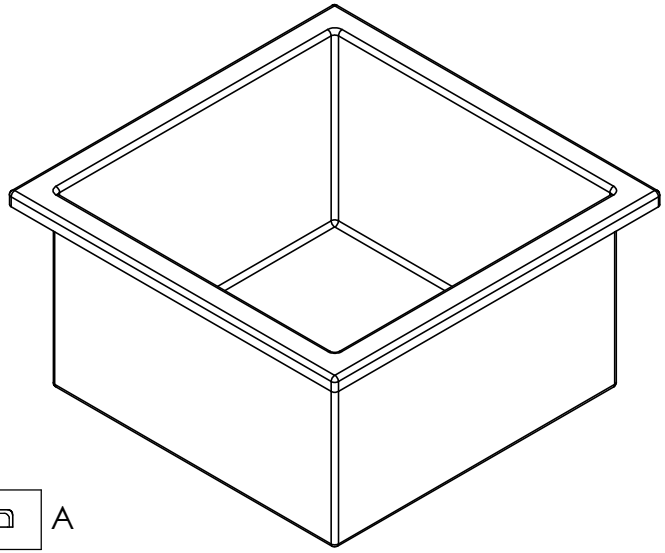

ALL FILLETS AND
ROUNDS R 3/8"

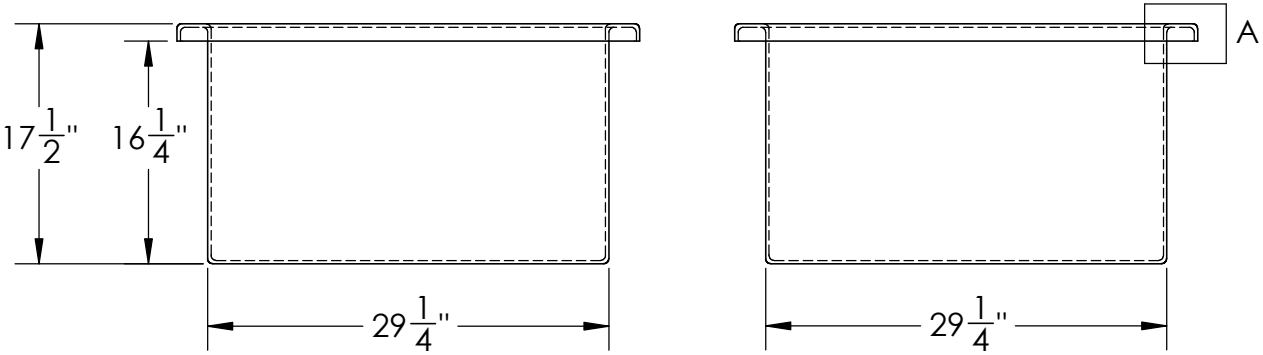

Black Heavy Duty Polyethylene
Tank w/ External Flange
#15289

TAMCO INDUSTRIES
1390 Neubrecht Road
Lima, Ohio 45801

	NAME	DATE
DRAWN	CDH	06/14/16
APPROVED	BAT	07/13/16
REVISED	JMP	03/23/18

DIMENSIONS ARE IN INCHES
TOLERANCE: ± 1/4"

MATERIAL
LLDPE - FDA resin

CAPACITY
69 US gal.

GRADUATIONS
NO

NOMINAL WALL THICKNESS
1/4"

COMMENTS:
Black
UV Stabilized

STOCK NO. 15289

REV A

DO NOT SCALE DRAWING

WEIGHT: 38 lbs.

MAX. OPERATING TEMP. 140°F
INTERMITTENT SERVICE TO 160°F
SEE CHEMICAL RESISTANCE
CHART FOR COMPATABILITY

PROPRIETARY AND CONFIDENTIAL

THE INFORMATION CONTAINED IN THIS DRAWING IS THE SOLE PROPERTY OF TAMCO. ANY REPRODUCTION IN PART OR AS A WHOLE WITHOUT THE WRITTEN PERMISSION OF TAMCO IS PROHIBITED.